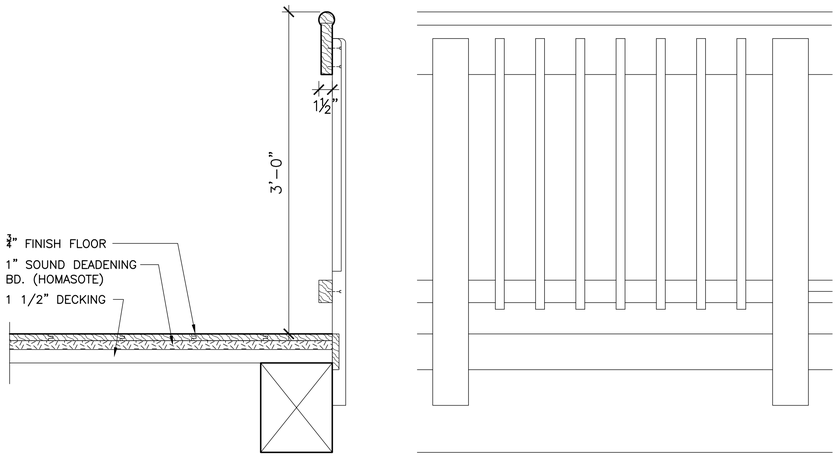

03 GUARDRAIL @ BALCONY
SCALE: 1 1/2"=1'-0"

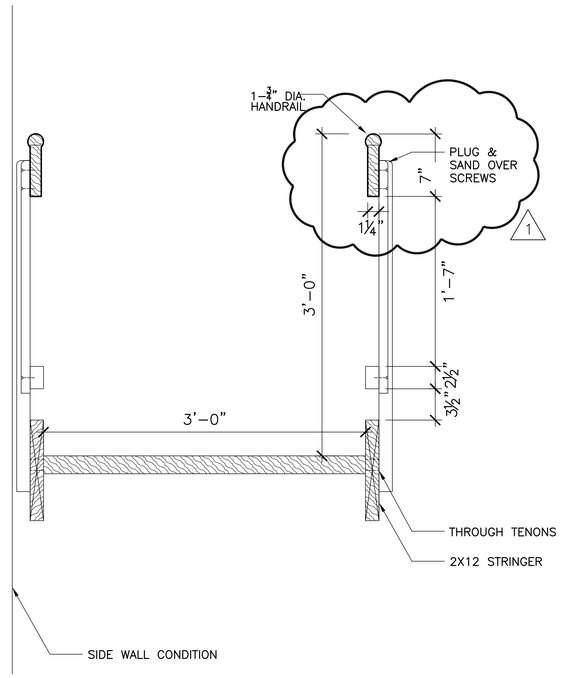

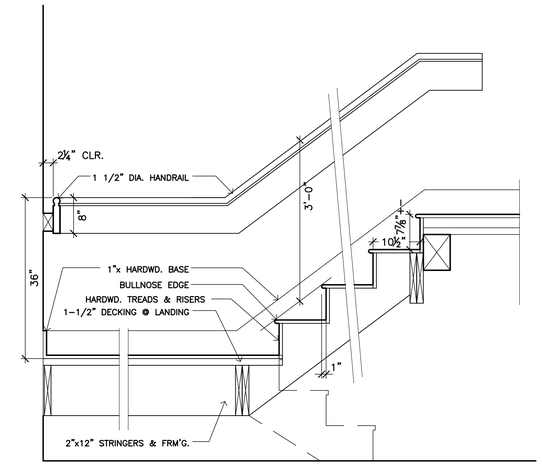

01 DETAIL @ STAIR 04
SCALE: 3/4"=1'-0"

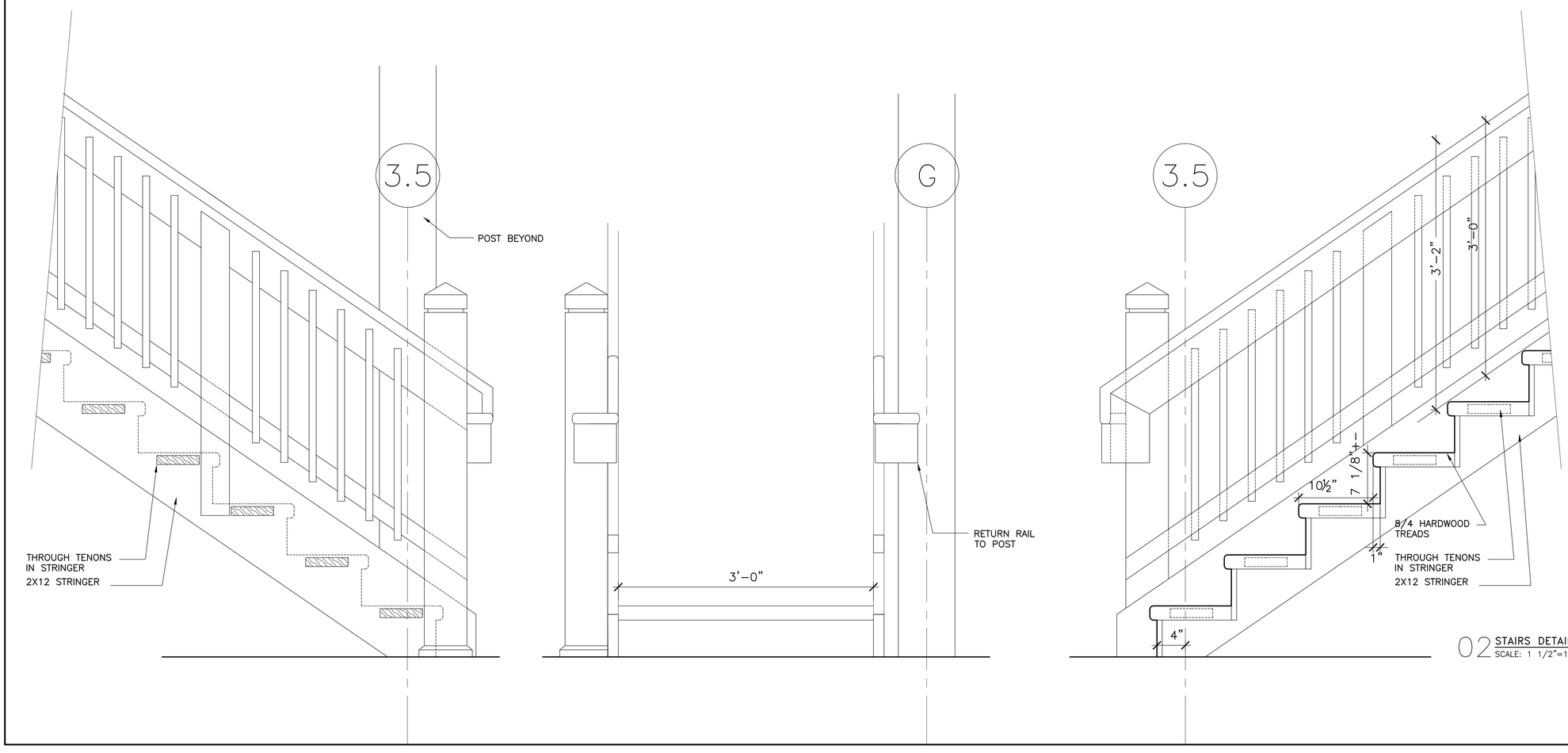

02 STAIRS DETAIL @ LIVING 07
SCALE: 1 1/2"=1'-0"

EACH RISER TO BE A DIFFERNT SPECIES FROM GREEN WOODLANDS AS FOLLOWS:

1) PINE
2) SPRUCE
3) HEMLOCK
4) TAMARACK
5) FIR
6) YELLOW BIRCH
7) WHITE BIRCH
8) ASH
9) BEECH
10) SUGAR MAPLE
11) RED MAPLE
12) POPULAR
13) BLACK CHERRY
14) RED OAK OR WHITE OAK
15) LOCUST

SPECIES TO BE ENGRAVED ON RISERS

BANWELL ARCHITECTS

THE CARRIAGE HOUSE
6 SOUTH PARK STREET
LEBANON, NH 03766
T: 603 448 3778
F: 603 443 5555

P.O. BOX 830
16 STATE STREET
MONTPELIER, VT 05602
T: 802 223 5551
F: 802 223 5552

E: staff@banwell-architects.com

CONSULTANTS:

CONSTRUCTION MANAGER:
BRUSS CONSTRUCTION INC.
PO BOX 456
BRADFORD, NH 03221
T: 603 938 2069 F: 603 938 2621

ENVIRONMENTAL/LEED:
PAUL LEVEILLE
S.P.N.F.
54 PORTSMOUTH ST
CONCORD, NH 03301
T: 603 224 9945 F: 603 228 0423

TIMBERFRAME DESIGN:
PARADIGM BUILDERS
ED LEVIN
5 CROWLEY TERRACE
HANOVER, NH 03755
T: 603 643 2002

MECHANICAL:
PETERSEN ENGINEERING
PO BOX 4774
PORTSMOUTH, NH 03802
T: 603 436 4233 F: 603 436 4294

ELECTRICAL:
STANTEC
54 ROUTE 106 PO BOX 29
NO. SPRINGFIELD, VT 05150
T: 802 886 2261 F: 802 886 2260

LIGHTING & DAYLIGHTING:
J&M ASSOCIATES
JIM STOCKMAN
P.O. BOX 659A 4 WOODLAWN DRIVE
KENNEBUNKPORT, ME
T: 207 967 5223 F: 207 967 5469

WASTE MANAGEMENT:
CLIVUS NEW ENGLAND
P.O. BOX 127
NORTH ANDOVER, MA 01845
T: 978 794 9400 F: 978 794 9444

LICENSED ARCHITECT
C. STUART WHITE, JR.
NO. 650
THE STATE OF NEW HAMPSHIRE

REVISION	DATE	COMMENTS
1	8/31/06	Addendum 1

KEY PLAN:

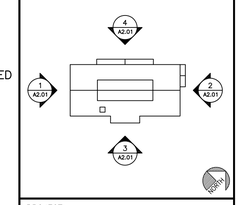

PROJECT:
GREEN WOODLANDS HOUSE/BARN PROJECT

ISSUED:
CONSTRUCTION DOCUMENTS

DRAWING TITLE:
STAIR DETAILS

PROJECT NO: 570 DATE: 07/31/06

SHEET NUMBER:
A4.03